版次 (Vension)	变更内容 (Rev. Content)	变更者 (Change Person)

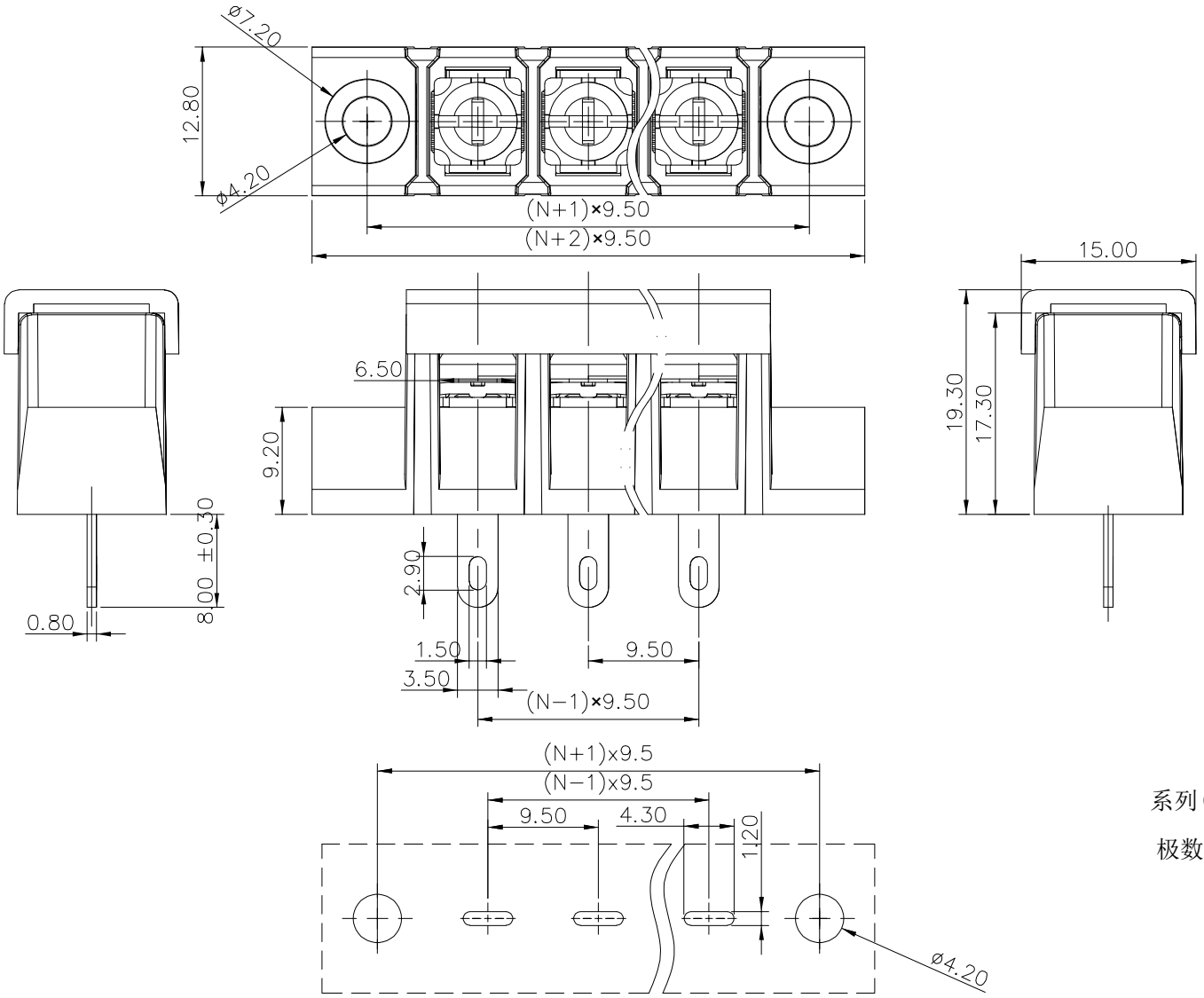

技术参数（Technical Data）				
UL	应用组别(Use group)	B	C	D
	额定电器参数 (Rated Electrical Parameters)	300V/20A	150V/20A	300V/10A
IEC	过压类别(Overvoltage Category) /污染等级(Pollution Degree)	III/3	III/2	II/2
	额定电器参数 (Rated Electrical Parameters)	600V/32A	600V/32A	600V/32A
压线范围(Wire Range)		22～12AWG		
工频耐压(Frequency Voltage)		/		
冲击耐压(Rated Surge Voltage)		/		
绝缘阻抗(Insulation Resistance)		/		
接触电阻(Contact Resistance)		/		
剥线长度(String Length)		/		
工作温度(Temperature)		-40° C～+105° C		
额定扭矩(Rated torque)		M4/1.2		
材质和电镀(Material and plating)				
绝缘材质(Housing)		PA66		
导体材料(Contact)		铜合金，镀锡(Copper alloy, Sn plated)		
/		/		

产品命名编码:
(Product Number Gode):

BT4-XX-950-48HM-YY

系列(Series)

极数(NO. of poles)

端子间距(Pitch)

型号(Model)

塑体颜色(Housing Color)

1:绿色(Green)	7:透明色 (Transparent)
2:蓝色(Blue)	8:白色(White)
3:黑色(Black)	9:黄色(Yellow)
4:灰色(Grey)	Y:多种颜色 (Mixed color)
5:橙色(Orange)	
6:红色(Red)	

P=9.50mm,N为孔位数(N for hole digits),有效位数为(Significant Digits):02p-24p

N	02P	03P	04P	05P	06P	07P	08P	09P	10P	11P	12P	13P
L	38.00	47.50	57.00	66.50	76.00	85.50	95.00	104.50	114.00	123.50	133.00	142.50
B	9.50	19.00	28.50	38.00	47.50	57.00	66.50	76.00	85.50	95.00	104.50	114.00
N	14P	15P	16P	17P	18P	19P	20P	21P	22P	23P	24P	
L	152.00	161.50	171.00	180.50	190.00	199.50	209.00	218.50	228.00	237.50	247.00	
B	123.50	133.00	142.50	152.00	161.50	171.00	180.50	190.00	199.50	209.00	218.50	

东莞市澳斯电子有限公司
DONGGUAN AOSI ELECTRONICS CO.,LTD,

型号(Type): BT4-XX-950-48HM-YY

核准(Approval): 图号(Drawing NO.):

核审(Audit): 单位(Units):mm 页码(Page):1/1

设计(Design) 比例(Scale):FULL

公差范围(Tolerance Range)		
150~		±1.50
60~150		±1.00
30~60		±0.60
6~30		±0.40
0~6		±0.25
角度 (Angle)	X	±2°
	X.X	±1°

版次(Version):T0