版次 (Vension)	变更内容 (Rev. Content)	变更者 (Change Person)

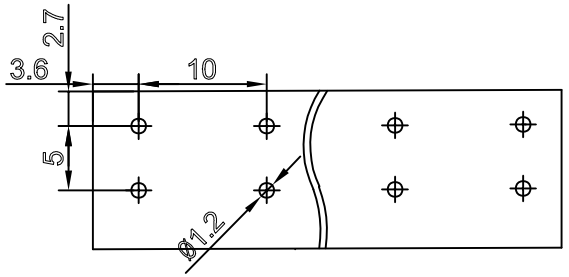

P.C.B. LAYOUT

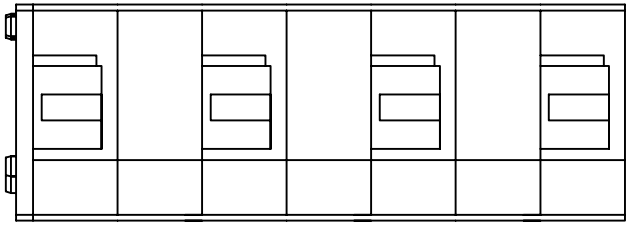

技术参数（Technical Data）				
UL	应用组别(Use group)	B	C	D
	额定电器参数 (Rated Electrical Parameters)	300V/10A	/	300V/10A
IEC	过压类别(Overvoltage Category) /污染等级(Pollution Degree)	III/3	III/2	III/2
	额定电器参数 (Rated Electrical Parameters)	300V/17.5A	450V/17.5A	630V/17.5A
压线范围(Wire Range)		18-22AWG 0.5~1.5mm		
工频耐压(Frequency Voltage)		AC 1600V		
冲击耐压(Rated Surge Voltage)		2500V		
绝缘阻抗(Insulation Resistance)		DC500V 500MΩ above		
接触电阻(Contact Resistance)		≤20mΩ		
剥线长度(String Length)		9-10（mm）		
工作温度(Temperature)		-40° C～+105° C		
额定扭矩(Rated torque)		/		
材质和电镀(Material and plating)				
绝缘材质(Housing)		PA66 UL94V-0		
导体材料(Contact)		红铜，镀锡(Red brass，Dumb tin)		
/		/		

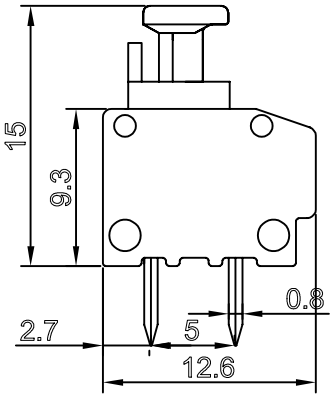

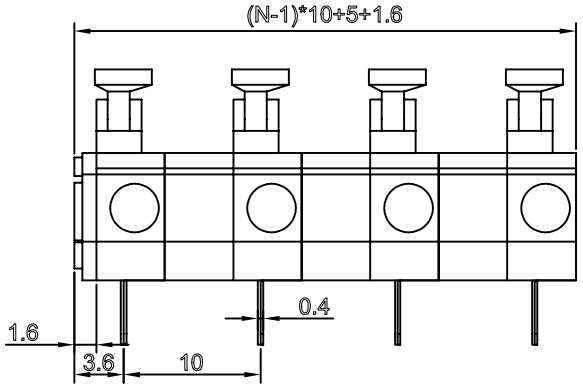

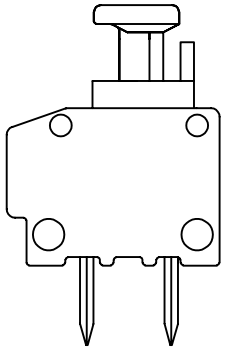

产品命名编码:
(Product Number Gode):

FS1.5-XX-1000-06-YY

系列(Series)

极数(NO. of poles)

端子间距(Pitch)

型号(Model)

塑体颜色(Housing Color)

1:绿色(Green)	7:透明色 (Transparent)
2:蓝色(Blue)	8:白色(White)
3:黑色(Black)	9:黄色(Yellow)
4:灰色(Grey)	Y:多种颜色 (Mixed color)
5:橙色(Orange)	
6:红色(Red)	

P=10.00mm,N为孔位数(N for hole digits),有效位数为(Significant Digits):02p-24p

N	02P	03P	04P	05P	06P	07P	08P	09P	10P	11P	12P	13P
L	16.60	26.60	36.60	46.60	56.60	66.60	76.60	86.60	96.60	106.60	116.60	126.60
B	10.00	20.00	30.00	40.00	50.00	60.00	70.00	80.00	90.00	100.00	110.00	120.00
N	14P	15P	16P	17P	18P	19P	20P	21P	22P	23P	24P	
L	136.60	146.60	156.60	166.60	176.60	186.60	196.60	206.60	216.60	226.60	236.60	
B	130.00	140.00	150.00	160.00	170.00	180.00	190.00	200.00	210.00	220.00	230.00	

东莞市澳斯电子有限公司
DONGGUAN AOSI ELECTRONICS CO.,LTD

型号(Type): FS1.5-XX-1000-06-YY

核准(Approval): 图号(Drawing NO.):

核审(Audit): 单位(Units):mm 页码(Page):1/1

设计(Design) 比例(Scale):FULL

公差范围(Tolerance Ran		
150~		±1.5
60~150		±1.0
30~60		±0.6
6~30		±0.4
0~6		±0.2
角度 (Angle)	X	±2°
	X.X	±1°

版次(Version):1