版次 (Vension)	变更内容 (Rev. Content)	变更者 (Change Person)

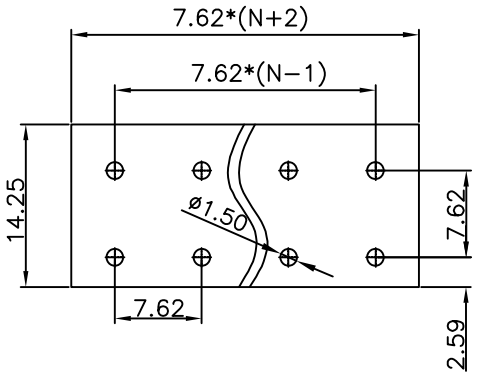

P.C.B. LAYOUT

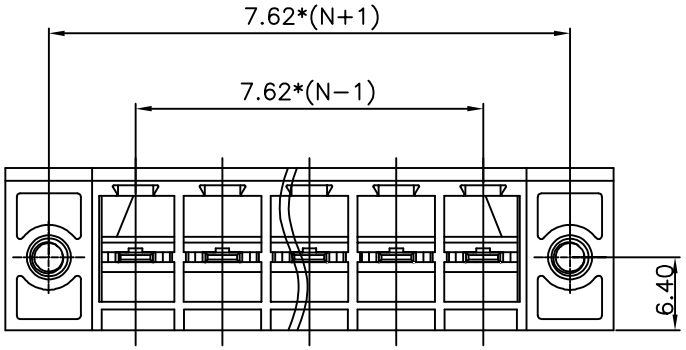

技术参数（Technical Data）				
UL	应用组别(Use group)	B	C	D
	额定电器参数 (Rated Electrical Parameters)	300V/16A	300V/30A	300V/10A
IEC	过压类别(Overvoltage Category) /污染等级(Pollution Degree)	III/3	III/2	III/2
	额定电器参数 (Rated Electrical Parameters)	400V/20A	630V/16A	1000V/20A
压线范围(Wire Range)		/		
工频耐压(Frequency Voltage)		AC 1600V		
冲击耐压(Rated Surge Voltage)		6000V		
绝缘阻抗(Insulation Resistance)		DC500V 500MΩ above		
接触电阻(Contact Resistance)		≤20mΩ		
剥线长度(String Length)		/		
工作温度(Temperature)		-40°C～+105°C		
额定扭矩(Rated torque)		/		
焊锡温度(Soldering temperature)		260°C/5S		
材质和电镀(Material and plating)				
绝缘材质(Housing)		PA66 UL94V-0		
导体材料(Contact)		铜合金，镀锡(Copper alloy, Sn plsted)		

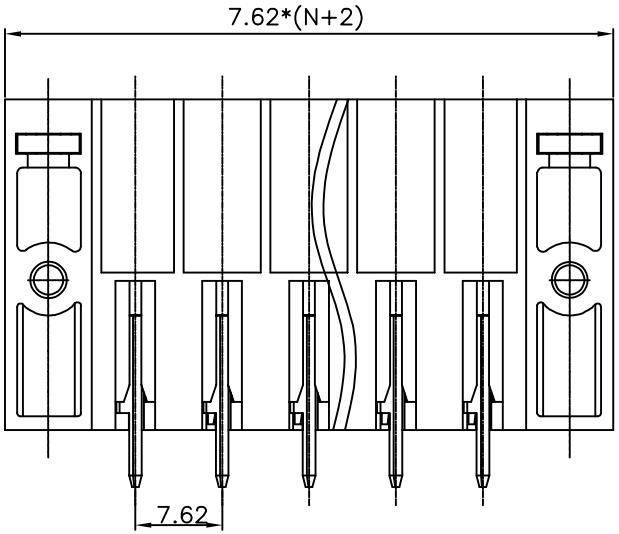

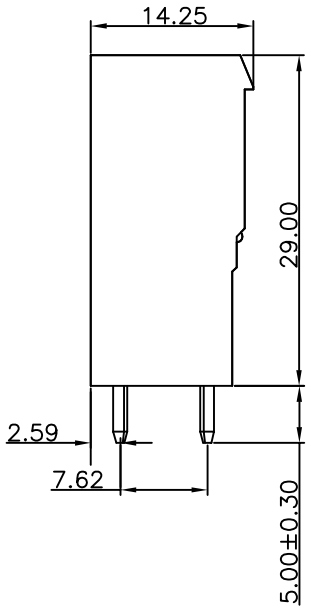

产品命名编码：
(Product Number Gode):

FPM4-XX-762-04-YY

系列(Series)

极数(NO.of poles)

端子间距(Pitch)

型号(Model)

塑体颜色(Housing Color)

1:绿色(Green)	7:透明(Transparent)
2:蓝色(Blue)	8:白色(White)
3:黑色(Black)	9:黄色(Yellow)
4:灰色(Grey)	Y:多种颜色(Mixed color)
5:橙色(Orange)	
6:红色(Red)	

P=7.62mm,N为孔位数(N for hole digits),有效位数为(Significant Digits):02p-24p

N	02P	03P	04P	05P	06P	07P	08P	09P	10P	11P	12P	13P
L	30.78	38.10	45.72	53.34	60.96	68.58	76.20	83.82	91.44	99.06	106.68	114.30
B	7.62	15.24	22.86	30.48	38.10	45.72	53.34	60.96	68.58	76.20	83.82	91.44
N	14P	15P	16P	17P	18P	19P	20P	21P	22P	23P	24P	
L	121.92	129.54	137.16	144.78	152.40	160.02	167.64	175.26	182.88	190.50	198.12	
B	99.06	106.68	114.30	121.92	129.54	137.16	144.78	152.40	160.02	167.64	175.26	

东莞市澳斯电子有限公司
DONGGUAN AOSI ELECTRONICS CO.,LTD

型号(Type): FPM4-XX-762-04-YY

核准(Approval):	图号(Drawing NO.):	
核审(Audit):	单位(Units):mm	页码(Page):1/1
设计(Design):	比例(Scale):FULL	版次(Version):T0

公差范围(Tolerance Range)		
150~		±1.50
60~150		±1.00
30~60		±0.60
6~30		±0.40
0~6		±0.25
角度 (Angle)	X	±2°
	X.X	±1°